Ye Zee News

Issue #10
APRIL 1985

Registered By Australian Post
Publication No. SBG0711

Return Address
30 Seventh ave. Cheltenham S.A. 5014

V.Z. GENERAL PURPOSE PORTS

By Louis Villani

These ports occupy locations 128-135 decimal and are in the area set aside for user peripherals.

They are uniquly decoded for these locations (that is they will not appear at any other location) to avoid conflict with other peripherals.

The total lines available are 64 lines in - 64 lines out. Only one set is shown on the circuit and is, generally, all that will be required.

Should more latches be used, you may have to buffer the address and data lines to avoid loading affects.

The outlines are latching, the in lines are momentary.

Decoupling is not shown but generally a point one mfd. across the power supply pin on each chip is a good idea.

The method of access to the ports is left up to the constructor.

Approximate cost, depending on what you have - $10, not counting pc. boards.

SEE PAGE 4

****

FROM PAGE 3

```
1610 LPRINT"P";P$
1620 LPRINT"H":RETURN
1650 LPRINTCHR$(18):LPRINT"R0,-50":LPRIN
T"J150,0":LPRINT"R0,-50"
1652 LPRINT"J-150,0":LPRINT"R50,-50":LPR
INT"J0,150"
1654 LPRINT"R50,0":LPRINT"J0,-150":LPRIN
T"R-100,0":LPRINT"I"
1656 LPRINT"S3":RETURN
1700 IF A=1 THEN 1801
1710 IF A=2 THEN 1802
1720 IF A=3 THEN 1803
1730 IF A=4 THEN 1804
1740 IF A=5 THEN 1805
1750 IF A=6 THEN 1806
1760 IF A=7 THEN 1807
1770 IF A=8 THEN 1808
1780 IF A=9 THEN 1809
1801 LPRINT"M15,115":RETURN
1802 LPRINT"M65,115":RETURN
1803 LPRINT"M115,115":RETURN
1804 LPRINT"M15,65":RETURN
1805 LPRINT"M65,65":RETURN
1806 LPRINT"M115,65":RETURN
1807 LPRINT"M15,15":RETURN
1808 LPRINT"M65,15":RETURN
1809 LPRINT"M115,15":RETURN
1900 LPRINT"R-330,-15":LPRINT"I":N=1:GOT
O2
2000 INPUT "DO YOU WANT ANOTHER GAME";Z$
2010 IF LEFT$(Z$,1)="Y" :GOTO 2020
2011 PRINT:CLS:PRINT@256,"OK, MAYBE SOME
 OTHER TIME THEN"
2015 LPRINT"A":END
2020 N=N+1:IF N>3 THEN 1900
2030 LPRINT"R165,150":LPRINT"I"
```

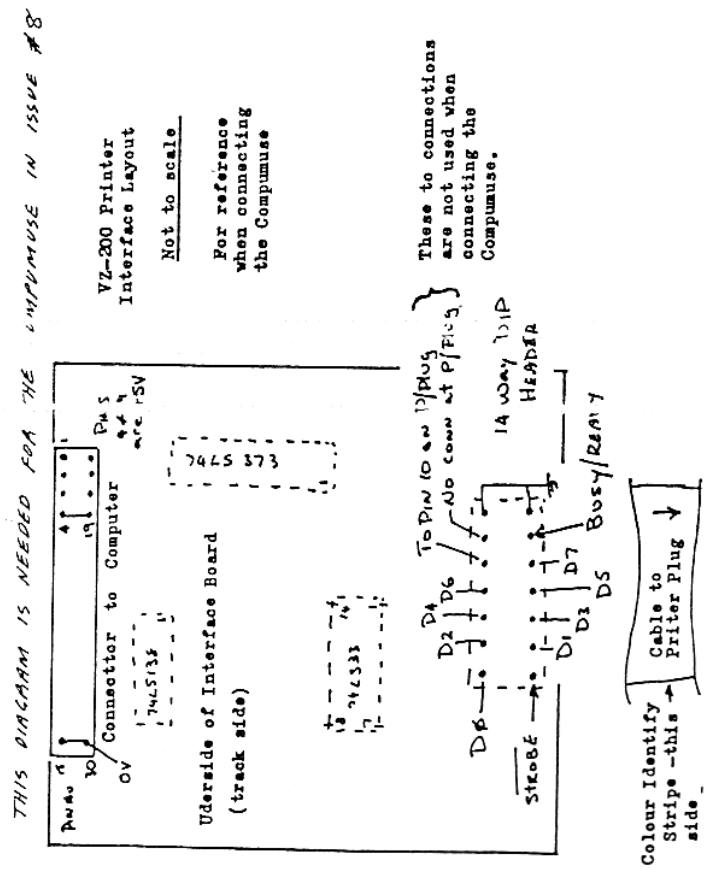

Rear View of VZ-200

SHEET "EXT".

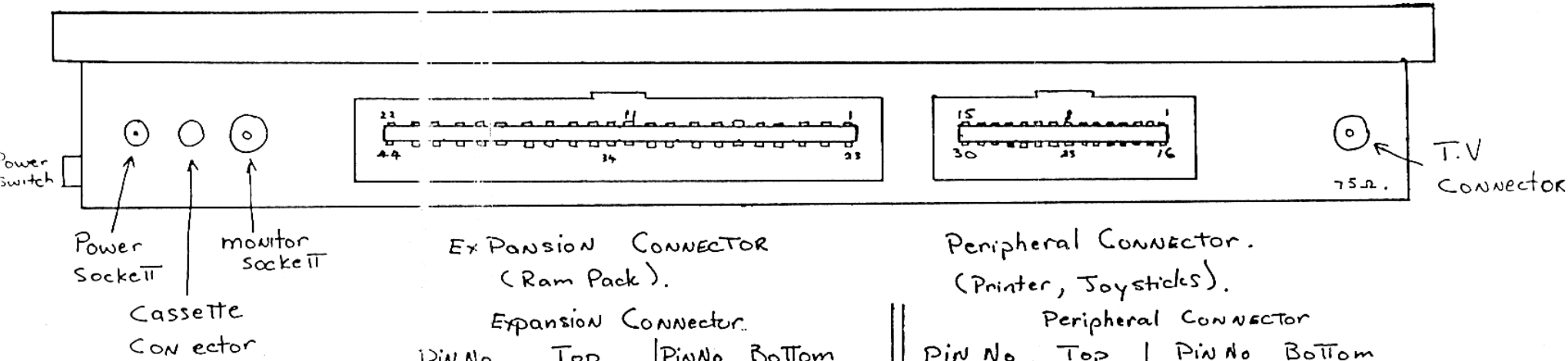

Ex Pansion Connector (Ram Pack).

Expansion Connector

PIN No	Top	PIN No	Bottom
1	GND ⏚	23	GND ⏚
2	$\overline{\text{RESET}}$	24	A11
3	A1ø	25	A12
4	A9	26	A13
5	A8	27	A14
6	A7	28	A15
7	A6	29	CLK
8	A5	30	D4
9	A4	31	D3
10	A3	32	D5
11	A2	33	D6
12	A1	34	N.C.
13	D2	35	Aø
14	D7	36	Dø
15	$\overline{\text{RFSH}}$	37	D1
16	$\overline{\text{M1}}$	38	$\overline{\text{INT}}$
17	$\overline{\text{WAIT}}$	39	$\overline{\text{HALT}}$
18	$\overline{\text{NMI}}$	40	$\overline{\text{MERQ}}$
19	$\overline{\text{RD}}$	41	$\overline{\text{WR}}$
20	$\overline{\text{IORQ}}$	42	N.C.
21	+5V's	43	+9V's
22	GND ⏚	44	N.C.

Peripheral Connector. (Printer, Joysticks).

Peripheral Connector

PIN No	Top	PIN No	Bottom
1	N.C.	16	N.C.
2	N.C.	17	N.C.
3	N.C.	18	N.C.
4	+5V's	19	+5V's
5	$\overline{\text{IORQ}}$	20	N.C.
6	D3	21	D4
7	D6	22	D5
8	D2	23	D7
9	Dø	24	D1
10	A5	25	$\overline{\text{RD}}$
11	A2	26	A1
12	A6	27	A4
13	A3	28	Aø
14	$\overline{\text{WR}}$	29	A7
15	GND ⏚	30	GND ⏚

TIC TAC TOE FOR PRINTER PLOTTER
THIS GIVES YOU A PRINT OUT OF YOUR
GAMES AS YOU GO ALONG AND ALSO DISPLAYS
THE GAME ON THE VDU SO IF YOU DON'T
HAVE A PRINTER PLOTTER JUST LEAVE
OUT ALL THE SUBROUTINES FOR PRINTER
ROUTINES (1500 AND 1600)

BY A.G. DAVIS

```
0 DIM S(9)
1 N=1
2 CLS:PRINT TAB(10);"TIC-TAC-TOE"
3 PRINT" FOR VZ 200 AND PRINTER PLOTTER
          BY R,G,DAVIS"
5 FOR X=1TO9:S(X)=0:NEXT
8 PRINT"THE BOARD IS NUMBERED:"
10 PRINT"1 2 3"
12 PRINT"4 5 6"
14 PRINT"7 8 9"
16 PRINT:PRINT:PRINT
17 GOSUB 1650
50 INPUT"DO YOU WANT TO BE X OR O";C$
55 IF C$="X" THEN 475
60 P$="O":Q$="X"
100 G=-1:H=1:IF S(5)<>0 THEN 103
102 S(5)=-1:A=5:GOSUB 1500:GOTO 195
103 IF S(5)<>0 THEN 106
104 IF S(1)<>0 THEN 110
105 S(1)=-1:A=1:GOSUB 1500:GOTO 195
106 IF S(2)=1 AND S(1)=0 THEN 181
107 IF S(4)=1 AND S(1)=0 THEN 181
108 IF S(6)=1 AND S(9)=0 THEN 189
109 IF S(8)=1 AND S(9)=0 THEN 189
110 IF G=1 THEN 112
111 GOTO 118
112 J=3*INT((M-1)/3)+1
113 IF 3*INT((M-1)/3)+1=M THEN K=1
114 IF 3*INT((M-1)/3)+2=M THEN K=2
115 IF 3*INT((M-1)/3)+3=M THEN K=3
116 GOTO 120
118 FOR J=1 TO 7 STEP 3:FOR K=1 TO 3
120 IF S(J)<>G THEN 130
122 IF S(J+2)<>G THEN 135
126 IF S(J+1)<>0 THEN 150
128 S(J+1)=-1:A=J+1:GOSUB 1500:GOTO 195
130 IF S(J)=H THEN 150
131 IF S(J+2)<>G THEN 150
132 IF S(J+1)<>G THEN 150
133 S(J)=-1:A=J:GOSUB 1500:GOTO 195
135 IF S(J+2)<>0 THEN 150
136 IF S(J+1)<>G THEN 150
138 S(J+2)=-1:A=J+2:GOSUB 1500:GOTO 195
[illegible]
152 IF S(K+6)<>G THEN 165
156 IF S(K+3)<>0 THEN 170
158 S(K+3)=-1:A=K+3:GOSUB1500:GOTO 195
160 IF S(K)=H THEN 170
161 IF S(K+6)<>G THEN 170
162 IF S(K+3)<>G THEN 170
163 S(K)=-1:A=K:GOSUB 1500:GOTO 195
165 IF S(K+6)<>0 THEN 170
166 IF S(K+3)<>G THEN 170
168 S(K+6)=-1:A=K+6:GOSUB 1500:GOTO 195
170 GOTO 450
171 IF S(3)=G AND S(7)=0 THEN 187
172 IF S(9)=G AND S(1)=0 THEN 181
173 IF S(7)=G AND S(3)=0 THEN 183
174 IF S(9)=0 AND S(1)=G THEN 189
175 IF G=-1 THEN G=1:H=-1:GOTO 110
176 IF S(9)=1 AND S(3)=0 THEN 182
177 FOR I=2 TO 9:IF S(I)<>0 THEN 179
178 S(I)=-1:A=I:GOSUB1500:GOTO 195
179 NEXT I
181 S(1)=-1:A=1:GOSUB 1500:GOTO 195
182 IF S(1)=1 THEN 177
183 S(3)=-1:A=3:GOSUB 1500:GOTO 195
187 S(7)=-1:A=7:GOSUB 1500:GOTO 195
189 S(9)=-1:A=9:GOSUB 1500
195 PRINT:PRINT"THE COMPUTER MOVES TO...
"
202 GOSUB 1000
205 GOTO 500
450 IF G=1 THEN 465
455 IF J=7 AND K=3 THEN 465
460 NEXT K:NEXT J
465 IF S(5)=G THEN 171
467 GOTO 175
475 P$="X":Q$="O"
500 PRINT:INPUT"WHERE DO YOU MOVE";M
502 IF M=0 THEN PRINT"THANKS FOR THE GAM
E":GOTO 2000
503 IF M>9 THEN 506
505 IF S(M)=0 THEN 510
506 PRINT"THAT SQUARE IS OCCUPIED":PRINT
:PRINT:GOTO 500
510 G=1:S(M)=1:A=M:GOSUB 1600
520 GOSUB 1000
530 GOTO 100
1000 PRINT:FOR I=1 TO 9:PRINT" ";:IF S(I
)<>-1 THEN 1014
1012 PRINT Q$" ";:GOTO 1020
1014 IF S(I)<>0 THEN 1018
1016 PRINT"  ";:GOTO 1020
1018 PRINT P$" ";
1020 IF I<>3 AND I<>6 THEN 1050
1030 PRINT:PRINT"---*---*---"
1040 GOTO 1080
1050 IF I=9 THEN 1080
1060 PRINT"!";
1080 NEXT I:PRINT:PRINT:PRINT
1095 FOR I=1 TO 7 STEP 3
1100 IF S(I)<>S(I+1) THEN 1115
1105 IF S(I)<>S(I+2) THEN 1115
1110 IF S(I)=-1 THEN 1350
1112 IF S(I)=1 THEN 1200
1115 NEXT I:FOR I=1 TO 3:IF S(I)<>S(I+3)
 THEN 1150
1130 IF S(I)<>S(I+6) THEN 1150
1135 IF S(I)=-1 THEN 1350
1137 IF S(I)=1 THEN 1200
1150 NEXT I:FOR I =1 TO 9:IF S(I)=0 THEN
 1155
1152 NEXT I:GOTO 1400
1155 IF S(5)<>G THEN 1170
1160 IF S(1)=G AND S(9)=G THEN 1180
1165 IF S(3)=G AND S(7)=G THEN 1180
1170 RETURN
1180 IF G=-1 THEN 1350
1200 PRINT"OH NO,YOU BEAT ME!!  GOOD GAM
E":GOTO 2000
1350 PRINT"HA HA,I WIN,!!!!!!!!  ":GOTO
2000
1400 PRINT"IT'S A DRAW. THANKS":GOTO2000
1500 GOSUB 1700
1510 LPRINT"P";Q$
1520 LPRINT"H":RETURN
1600 GOSUB 1700
```

SEE PAGE 1

- GENERAL PURPOSE IN/OUT PORT — VZ 200 - PORTS 128 - 135

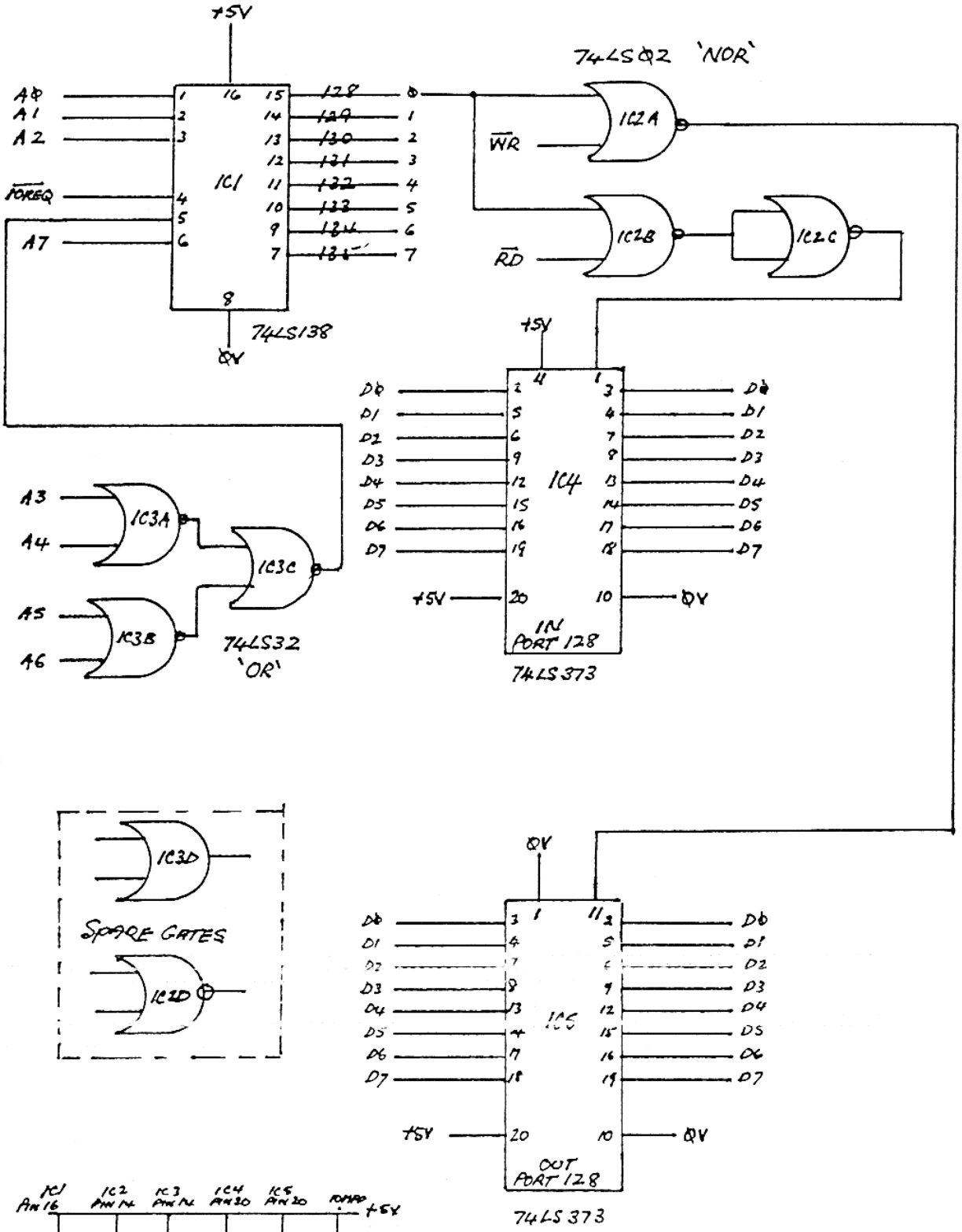

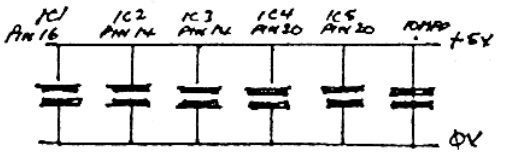

DECOUPLING 5 x ·1 CERAMIC
1 x 10 MFD TANT

COPYRIGHT: L.A. VILLANI AUG/84

BUILT + TESTED 27/8/84
WORKS AS DESIGNED